- REV. 4-11-14: ADDED ITEM NUMBER FOR TRANSITION.
- REV. 10-10-16: CHANGED TITLE. UPDATED REFERENCES TO OTHER STANDARD DRAWINGS. CHANGED TERMINAL TYPE.

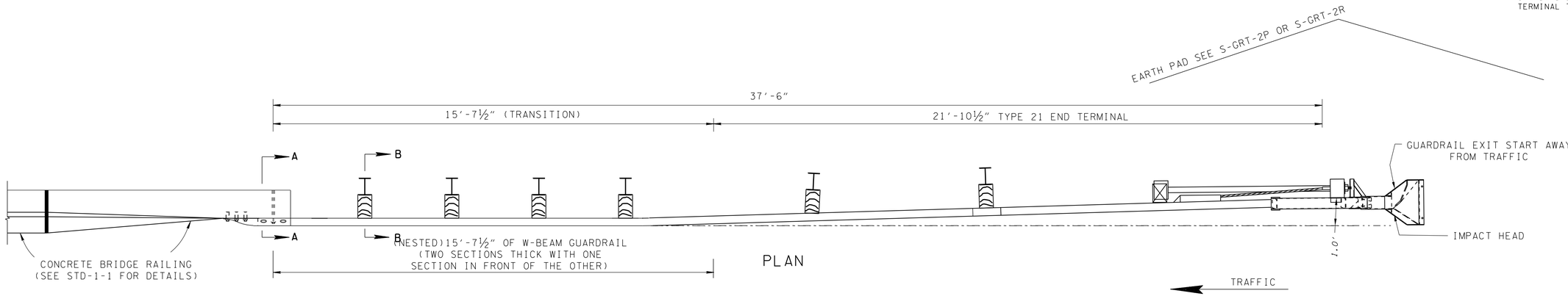

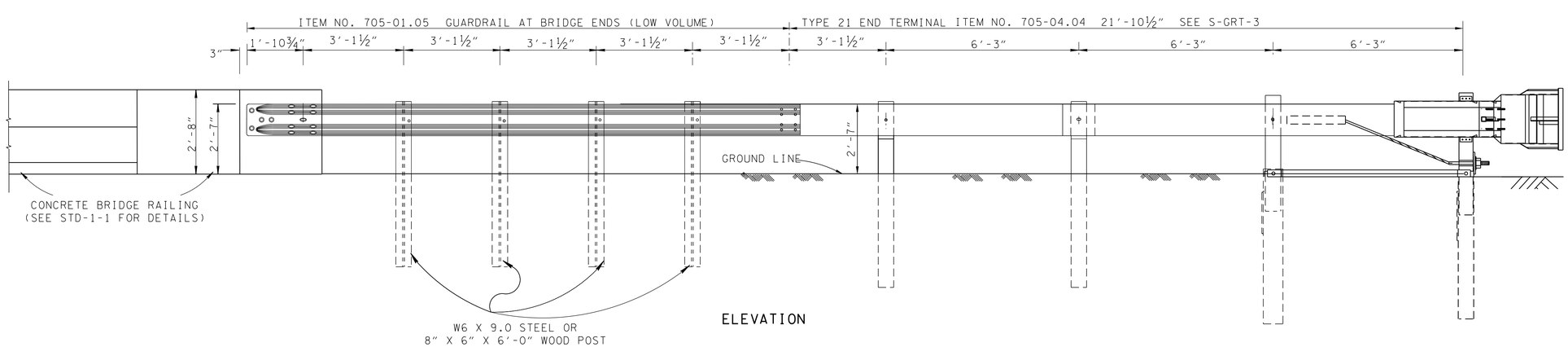

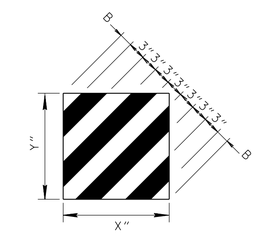

STRIPES AT 45° TOWARD THE TRAVELED WAY.

BACKGROUND: YELLOW (IN ACCORDANCE WITH STANDARD SPECIFICATION 916.06)

COPY: BLACK

"X" AND "Y" SHALL BE WITHIN 3" OF FACE WIDTH AND HEIGHT, RESPECTIVELY, AND FACE SHALL HAVE A MINIMUM 300 SQUARE INCHES COPY AREA.

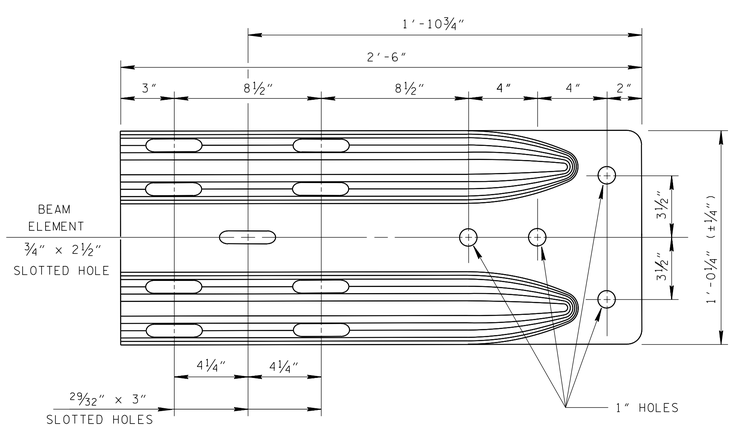

ELEVATION (FRONT)

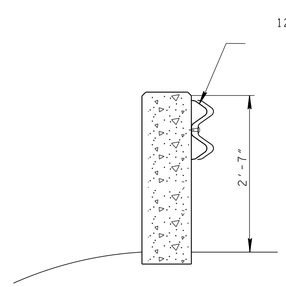

SECTION A-A

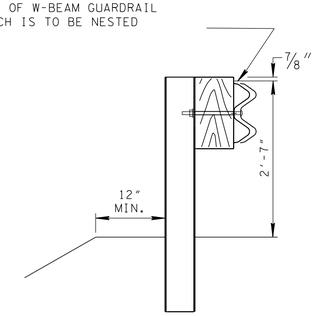

SECTION B-B

⅝" X 1¼" BUTTON HEAD BOLTS, NUTS, AND WASHERS TO BE INSTALLED THROUGH ENLARGED AREA OF SLOT

NOTE TO DESIGNER

THIS DRAWING IS TO BE USED FOR LOW SPEED (V< 45 MPH) LOCAL ROADS (ADT < 2000) ONLY

GENERAL NOTES

(A) SEE STANDARD DRAWING RD01-TS-1A FOR DETAILS AND SPECIFICATIONS REGARDING DESIGN STANDARDS FOR LOW-VOLUME LOCAL ROADS.

(B) THE POST OFFSET DIMENSIONS ARE GIVEN TO THE CENTER OF THE TRAFFIC FACE OF THE BLOCK-OUTS, EXCEPT AT THE FIRST TWO POSTS, WHERE THE DIMENSION IS TO THE CENTER OF THE TRAFFIC FACE OF THE POST. OFFSET POINTS ARE TO BE LOCATED BY CHORD MEASUREMENTS AT THE BACK OF THE RAIL EQUAL TO THE NOMINAL POST SPACINGS SHOWN. POSTS ARE TO BE SET APPROXIMATELY RADIAL TO THE RAILINGS AT EACH POST LOCATION.

(C) SEE MANUFACTURER'S FABRICATION DRAWINGS FOR DETAILS.

(D) SEE STRUCTURE'S BRIDGE RAIL STANDARD DRAWING FOR BOLT CONNECTION FOR MICHIGAN SHOE TO BRIDGE RAIL.

(E) TO BE USED ONLY FOR LOW SPEED TL-2 CONDITIONS. TRANSITION WAS EVALUATED BY TTI (REPORT 4564-1) AT NCHRP 350 TL-2.

MINOR REVISION -- FHWA APPROVAL NOT REQUIRED.

STATE OF TENNESSEE
DEPARTMENT OF TRANSPORTATION

GUARDRAIL CONNECTION TO BRIDGE END FOR LOCAL ROADS (ADT<2000)

7-11-13 | S-GRC-2